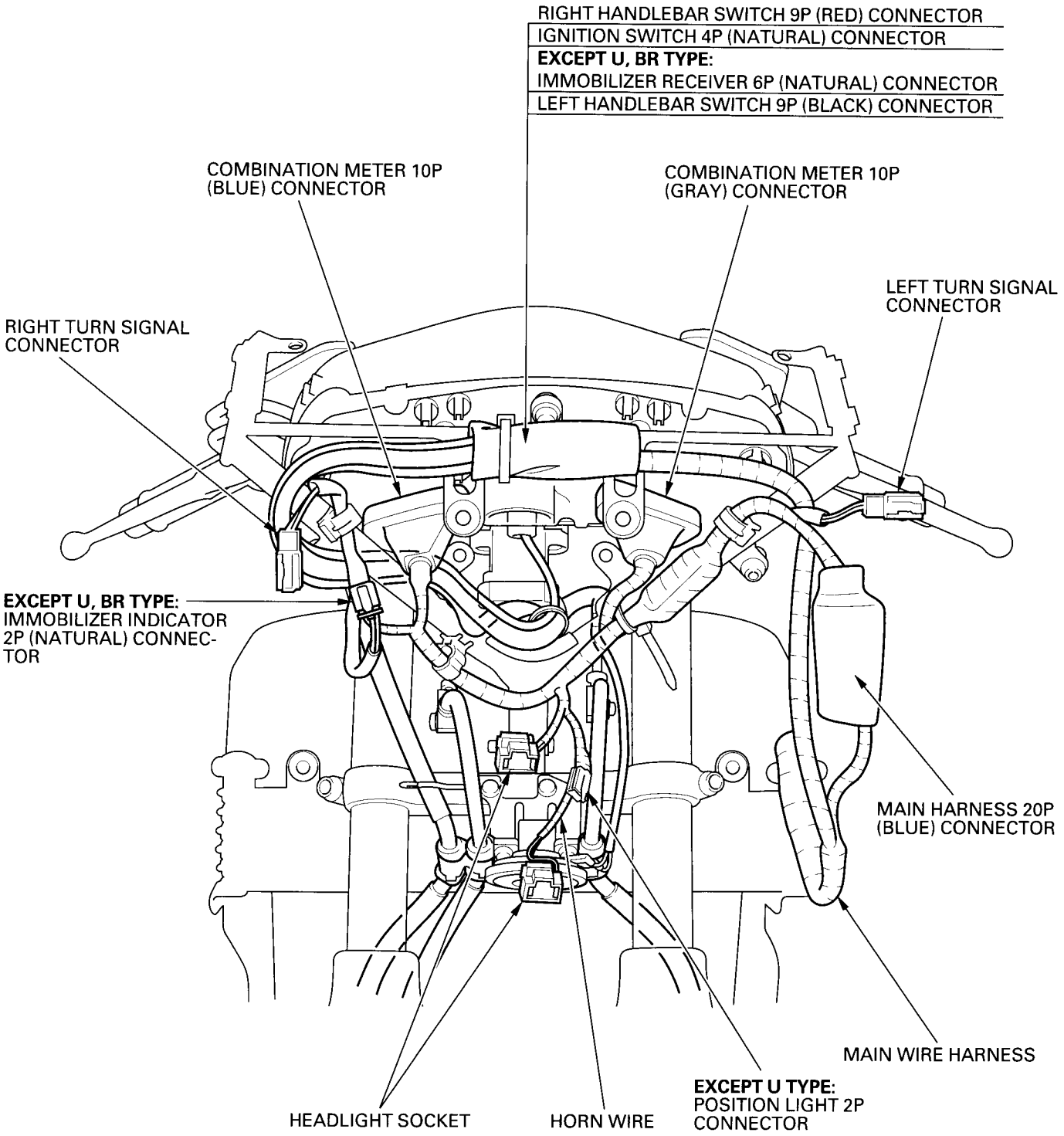CABLE & HARNESS ROUTING