F-1

Headlight

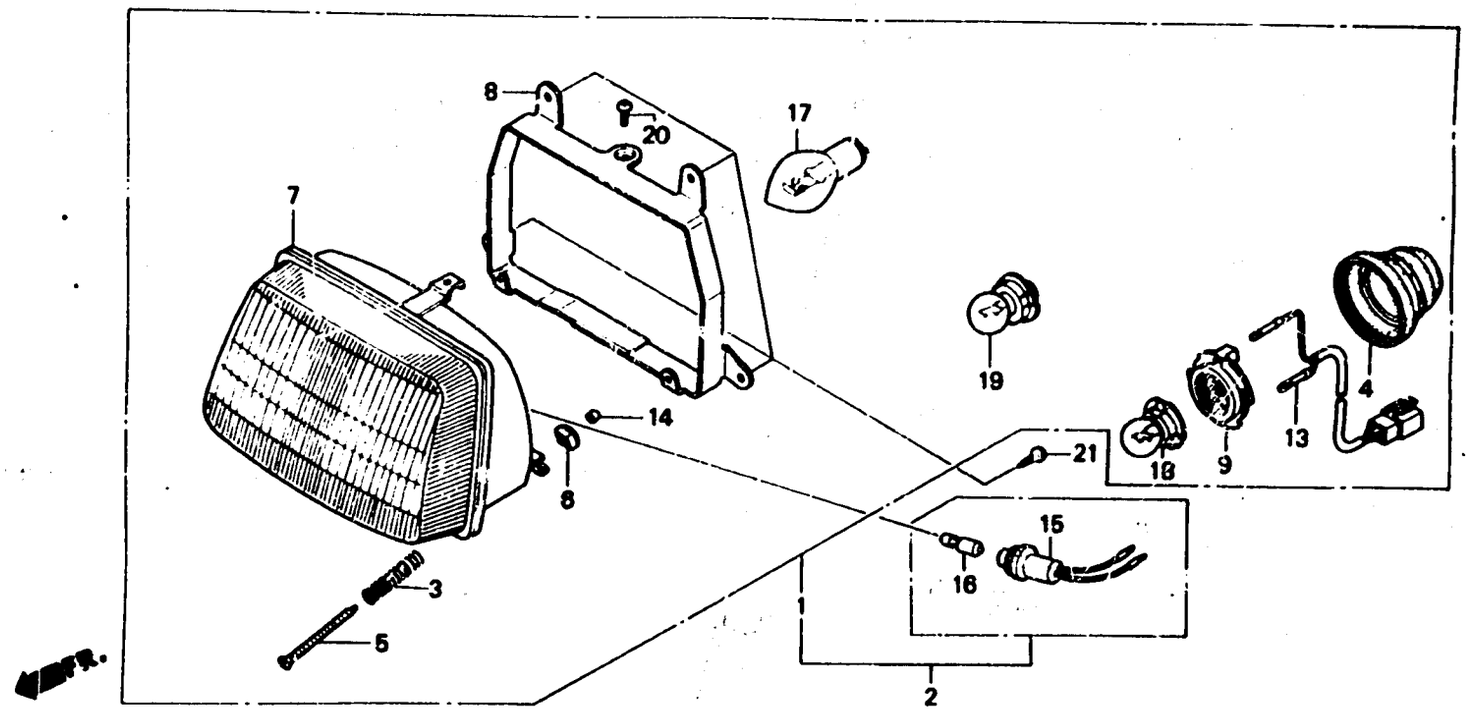

GY18 - F0100

Service item	F.R T.	Ref. No.	Part No.	Description	Reqd No. SA50 M	SM	Serial No.	Area Code
			33120-GY1-952	HEADLIGHT UNIT	1	-	- - - - - - - - - -	PO
			33120-GY1-961	HEADLIGHT UNIT	1	-	- - - - - - - - - -	IT
		8	33121-GY1-961	RING, HEADLIGHT	1	1		
		9	33125-GT8-621	SOCKET COMP., HEADLIGHT	1	1		
		13	33130-GY1-902	SOCKET COMP., HEADLIGHT	1	1	- - - - - - - - - -	B, E, H, PO
			33130-GY1-912	SOCKET, HEADLIGHT	1	-	- - - - - - - - - -	F
			33130-GY1-961	SOCKET COMP., HEADLIGHT	1	-	- - - - - - - - - -	IT
		14	33136-GY1-961	COVER, SCREW, 4 MM	2	2		
		15	33140-GY1-952	SOCKET COMP., POSITION LIGHT	1	-	- - - - - - - - - -	PO
			33140-GY1-961	SOCKET COMP., POSITION LIGHT	1	-	- - - - - - - - - -	IT
		16	34351-657-921	BULB (12V 5W)	1	-	- - - - - - - - - -	IT